ASSEMBLY INSTRUCTIONS
KENNA CANOPY BED - QUEEN

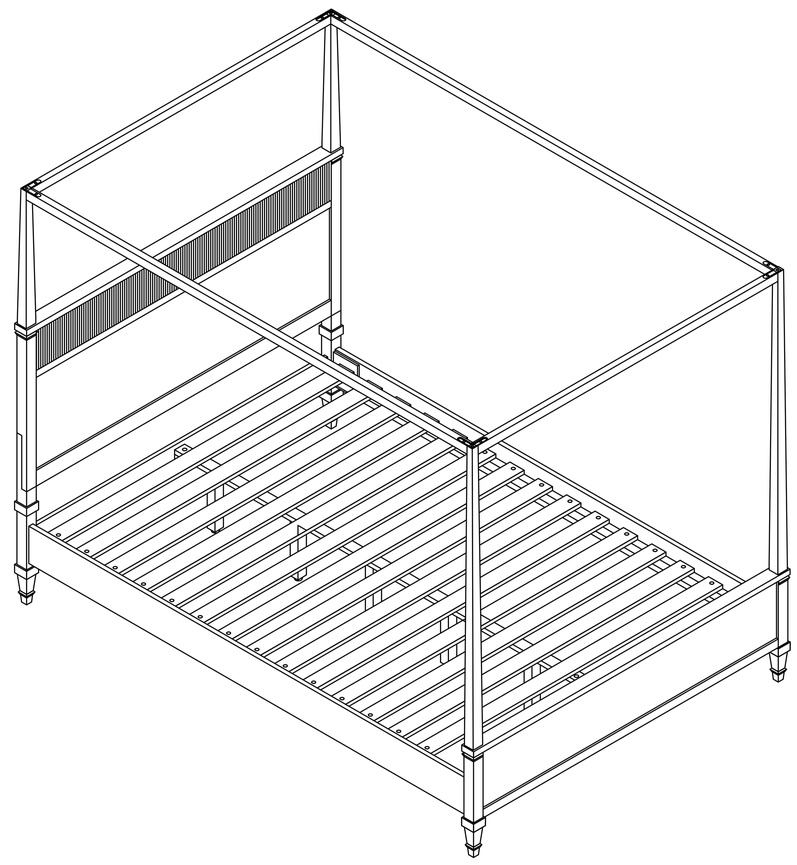

Please read below before assembly

- Assemble the product on a flat, soft surface such as a carpet or cloth to prevent scratching the finish.
- Do not discard any content until assembly is complete to avoid accidentally discarding small parts or hardware.
- Take out all parts and hardware from box.
- Failure to follow these instructions may cause the bolts to misalign during assembly.

DISCLAIMERS:

- WHEN PROPERLY ASSEMBLED, THIS ITEM IS SAFE FOR INTENDED USE. SELLER IS NOT LIABLE FOR ANY DAMAGES RESULTING FROM ITEM BEING IMPROPERLY ASSEMBLED AFTER PURCHASE.
- BOLTS MAY LOOSEN DURING NORMAL EVERYDAY USE. THEY SHOULD BE INSPECTED AT LEAST EVERY 3 MONTHS AND RE-TIGHTENED AS NEEDED TO PREVENT DAMAGE OR INJURY, AND ENSURE STABILITY.

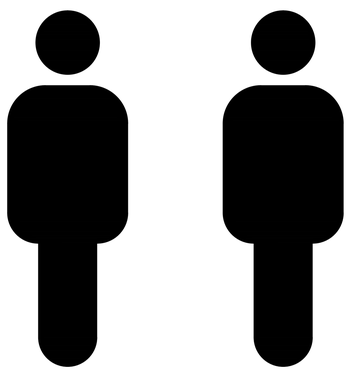

PEOPLE NEEDED

ESTIMATED TIME

TOOLS REQUIRED (NOT INCLUDED)

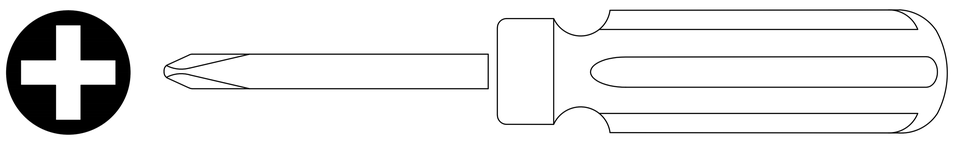

PHILLIPS HEAD SCREW DRIVER

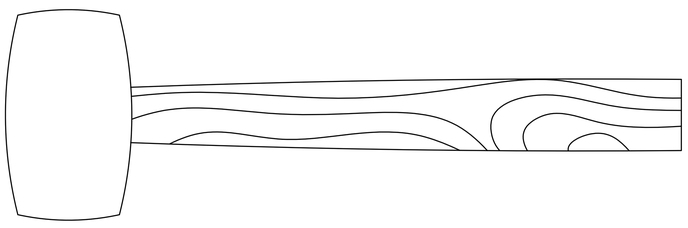

RUBBER MALLET

PARTS LIST

1	STRETCHER	1 PC	8	FOOTBOARD POST (RIGHT)	1 PC
2	HEADBOARD BOTTOM LEG	2 PCS	9	SIDE RAIL	2 PCS
3	HEADBOARD PANEL	1 PC	10	LONG TOP RAIL	2 PCS
4	HEADBOARD POST (LEFT)	1 PC	11	SHORT TOP RAIL	2 PCS
5	HEADBOARD POST(RIGHT)	1 PC	12	MIDDLE SUPPORT	1 PC
6	FOOTBOARD PANEL	1 PC	13	SUPPORT LEG	5 PCS
7	FOOTBOARD POST (LEFT)	1 PC	14	SLAT ROLL	2 SET

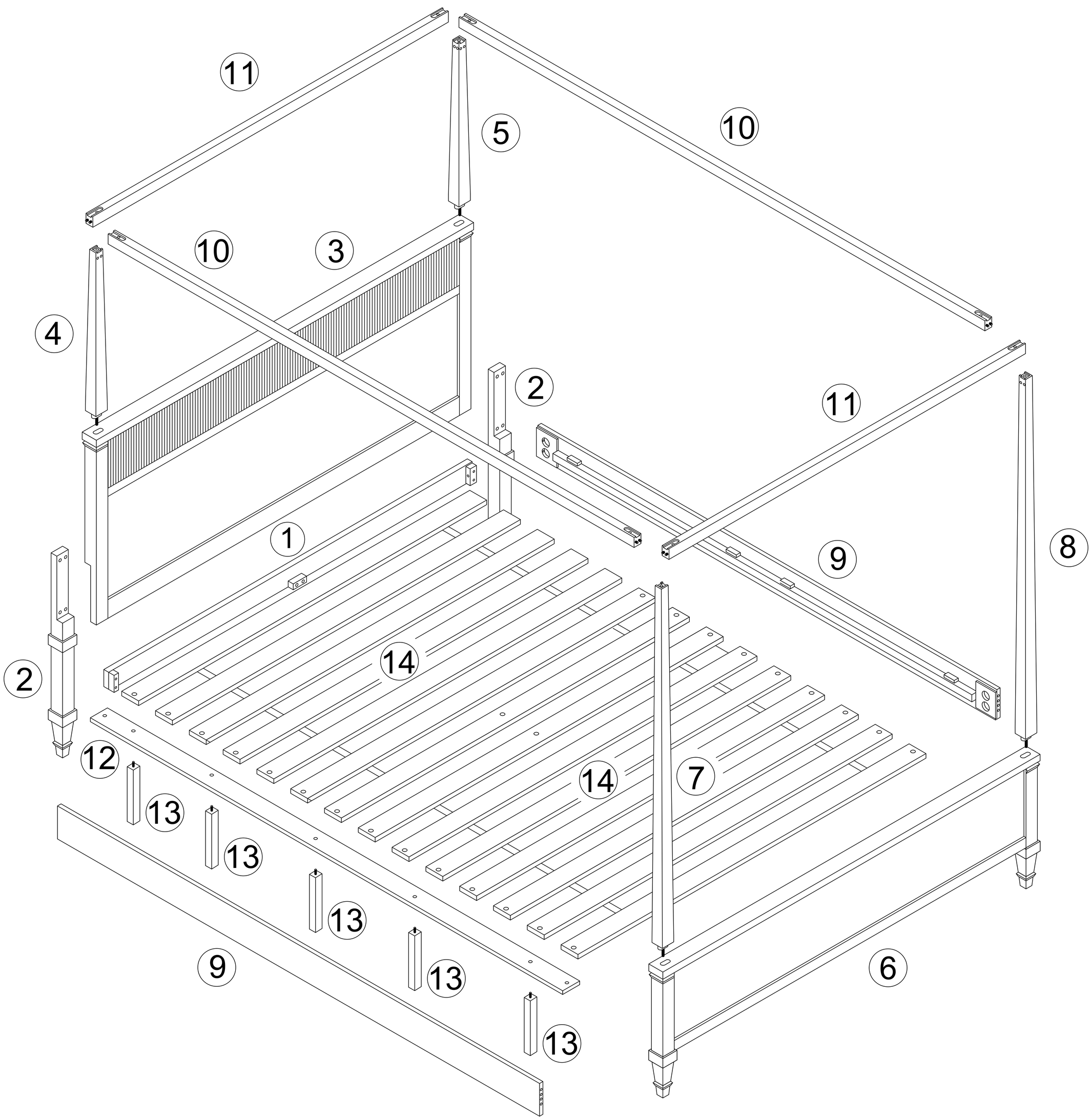

HARDWARE LIST

A	LONG BOLT - Ø 1/4" x 1 1/2"	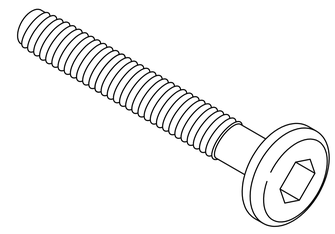	10 PCS + 1 Extra
B	SHORT BOLT - Ø 1/4" x 5/8"	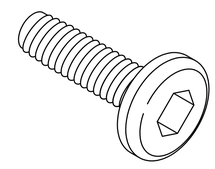	12 PCS + 1 Extra
C	MEDIUM BOLT - Ø 1/4" x 1 1/8"	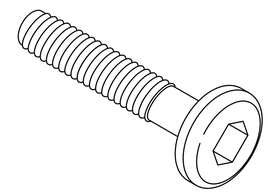	1 PC + 1 Extra
D	STUD BOLT - Ø 5/16" x 2 1/2"	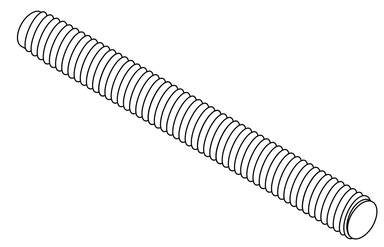	8 PCS + 1 Extra
E	CRESCENT WASHER - Ø 5/16"	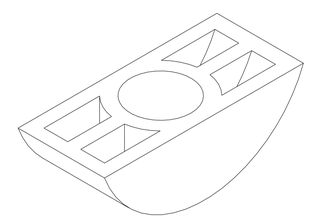	12 PCS + 1 Extra
F	HEXAGON NUT - Ø 5/16"	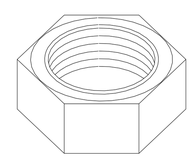	12 PCS + 1 Extra
G	WOOD SCREW - Ø 1/8" x 1 1/4"	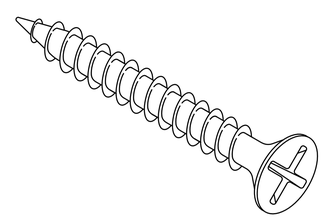	31 PCS + 1 Extra
H	WOOD DOWEL - Ø 3/8" x 1 3/16"	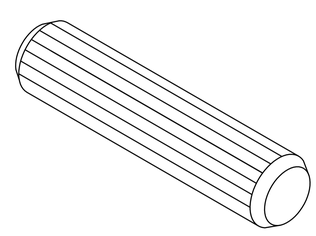	8 PCS + 1 Extra
I	ALLEN KEY - Ø 1/8"	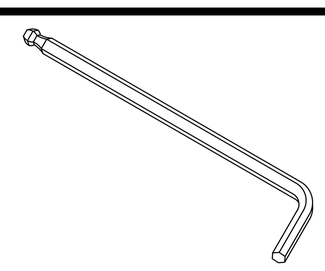	1 PC
J	SPANNER - 1/2"	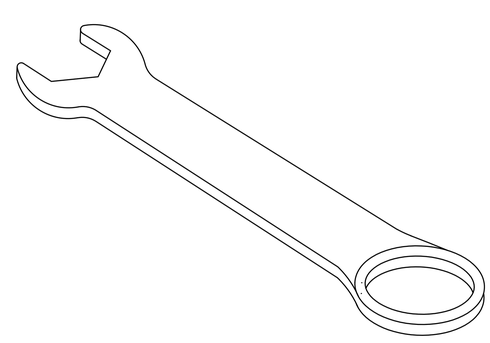	1 PC
K	L BRACKET - 3/4" x 3"	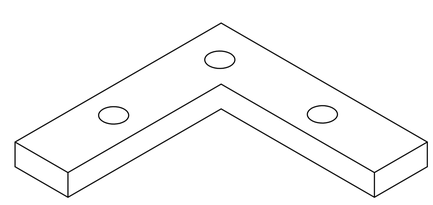	4 PCS

STEP 1

A	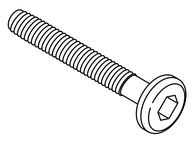	2 PCS
I	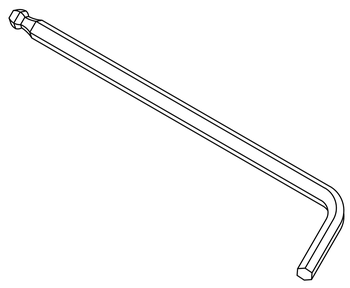	1 PC

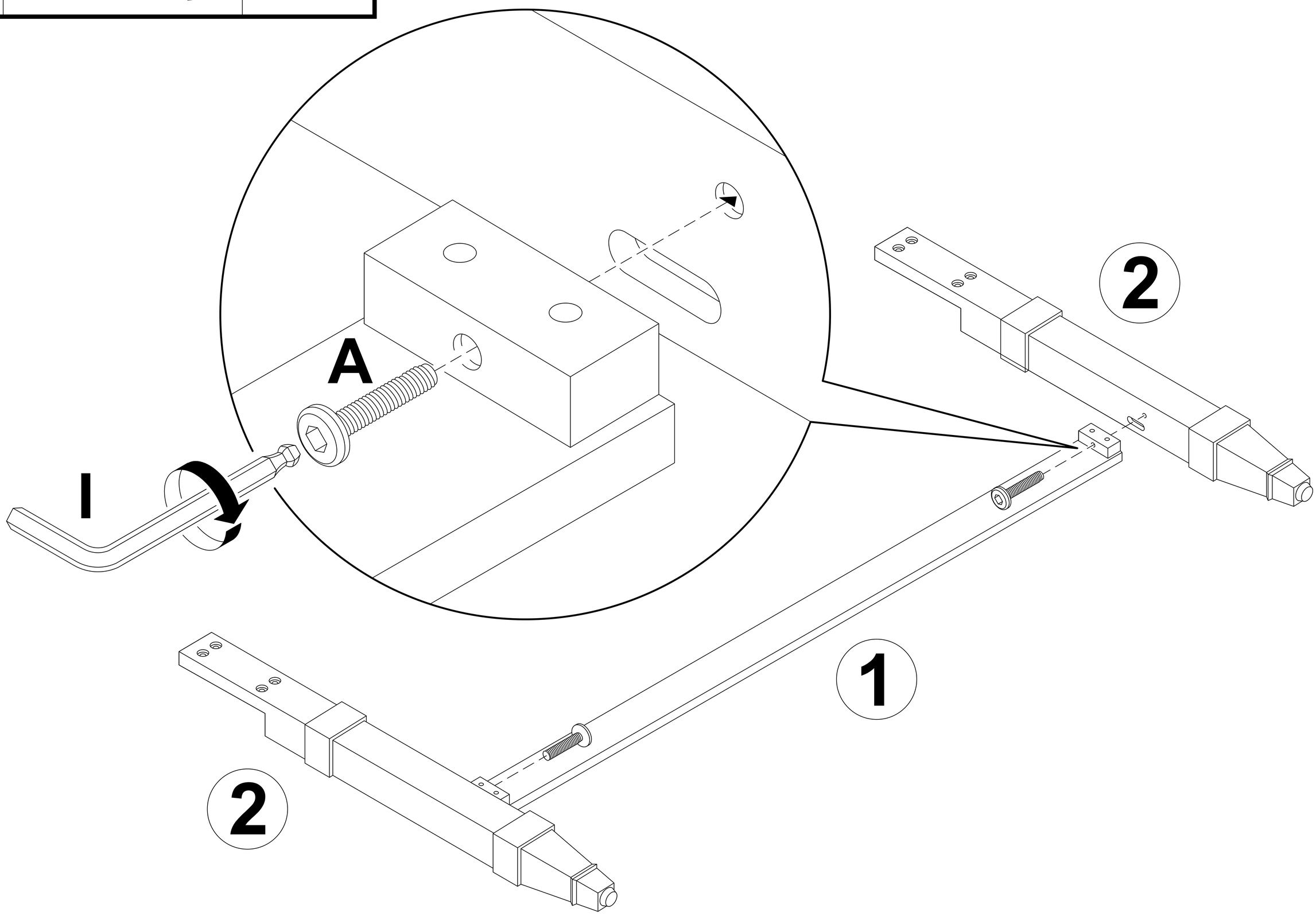

STEP 2

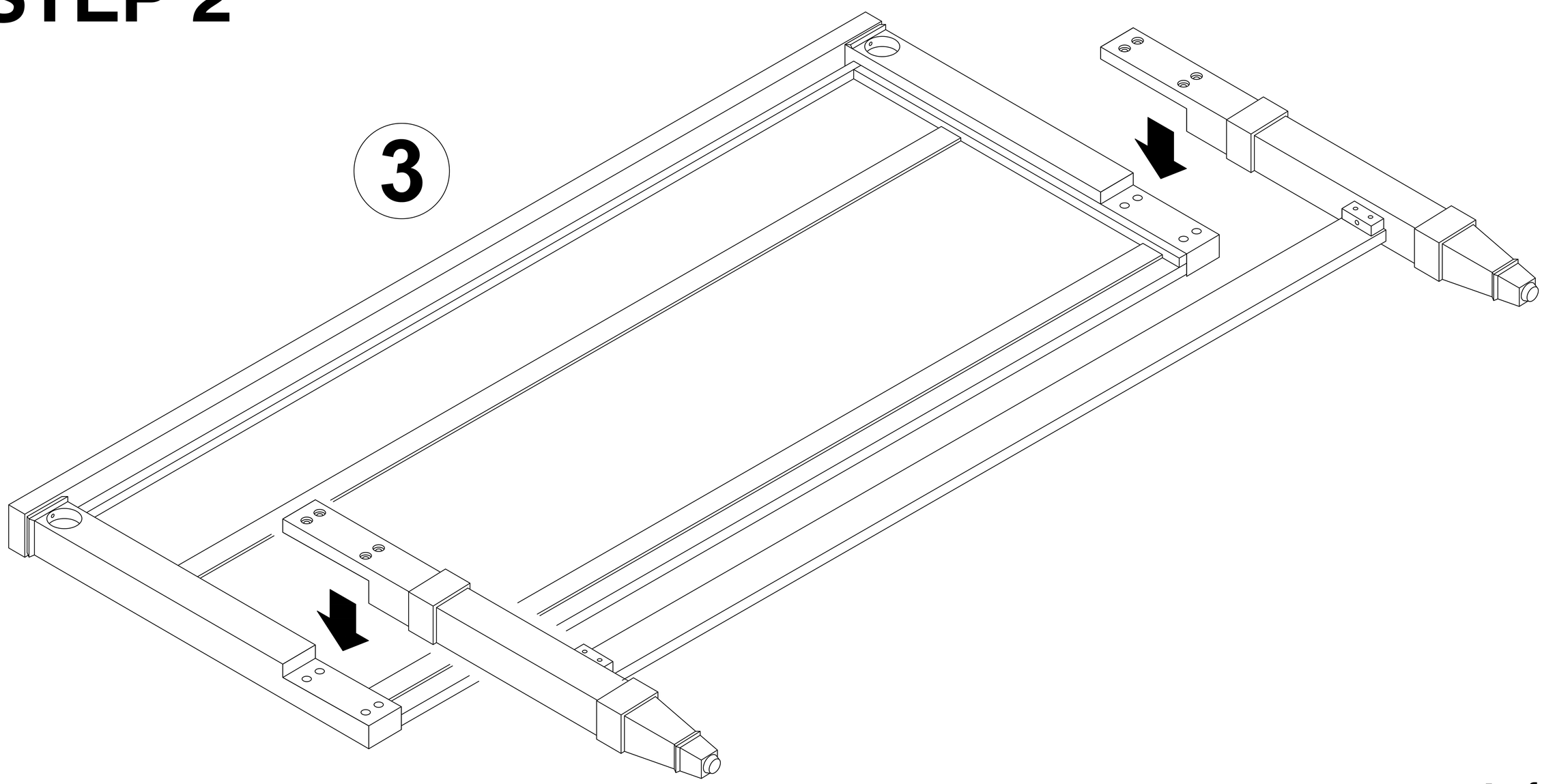

STEP 3

A		8 PCS
I		1 PC

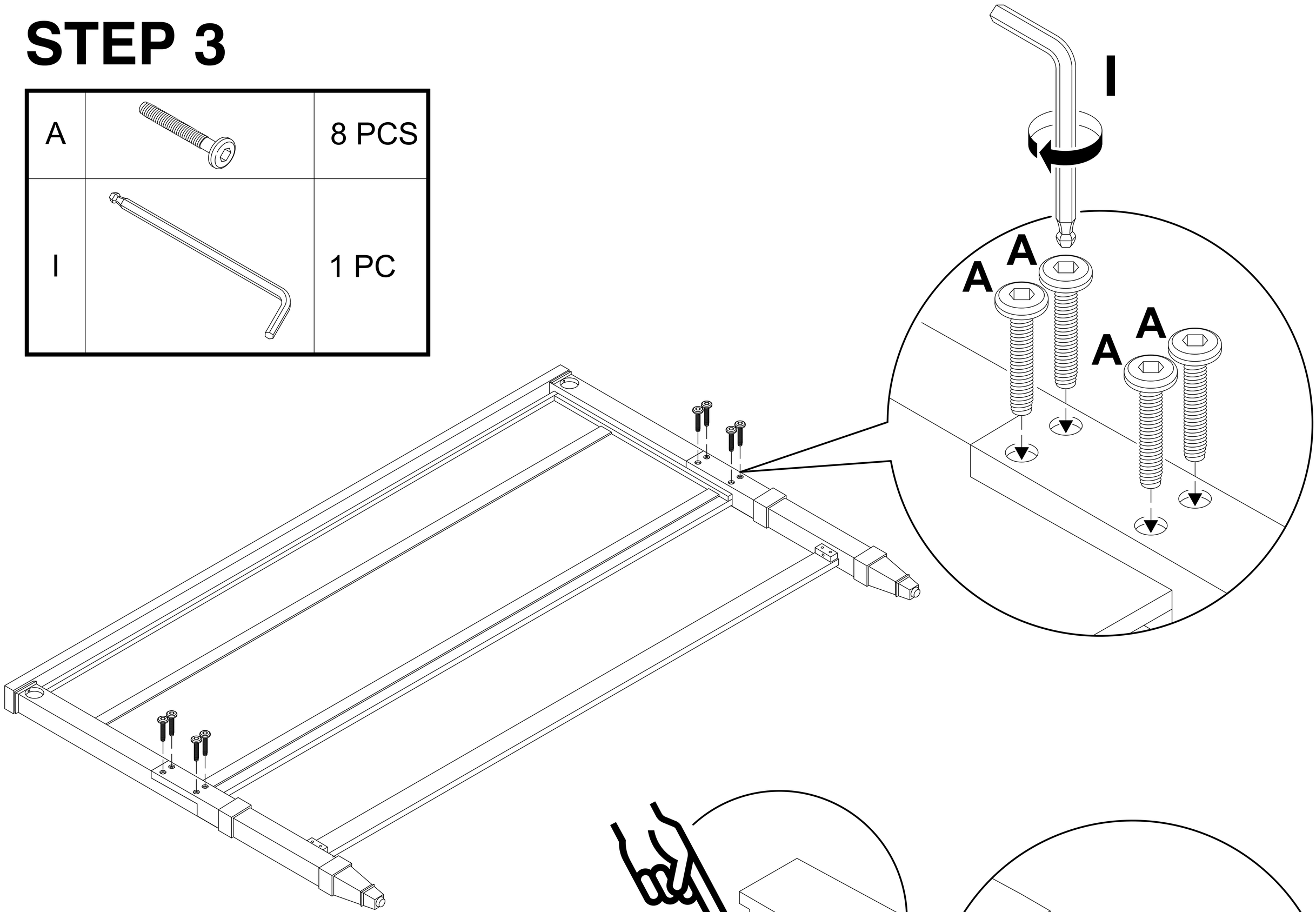

STEP 4

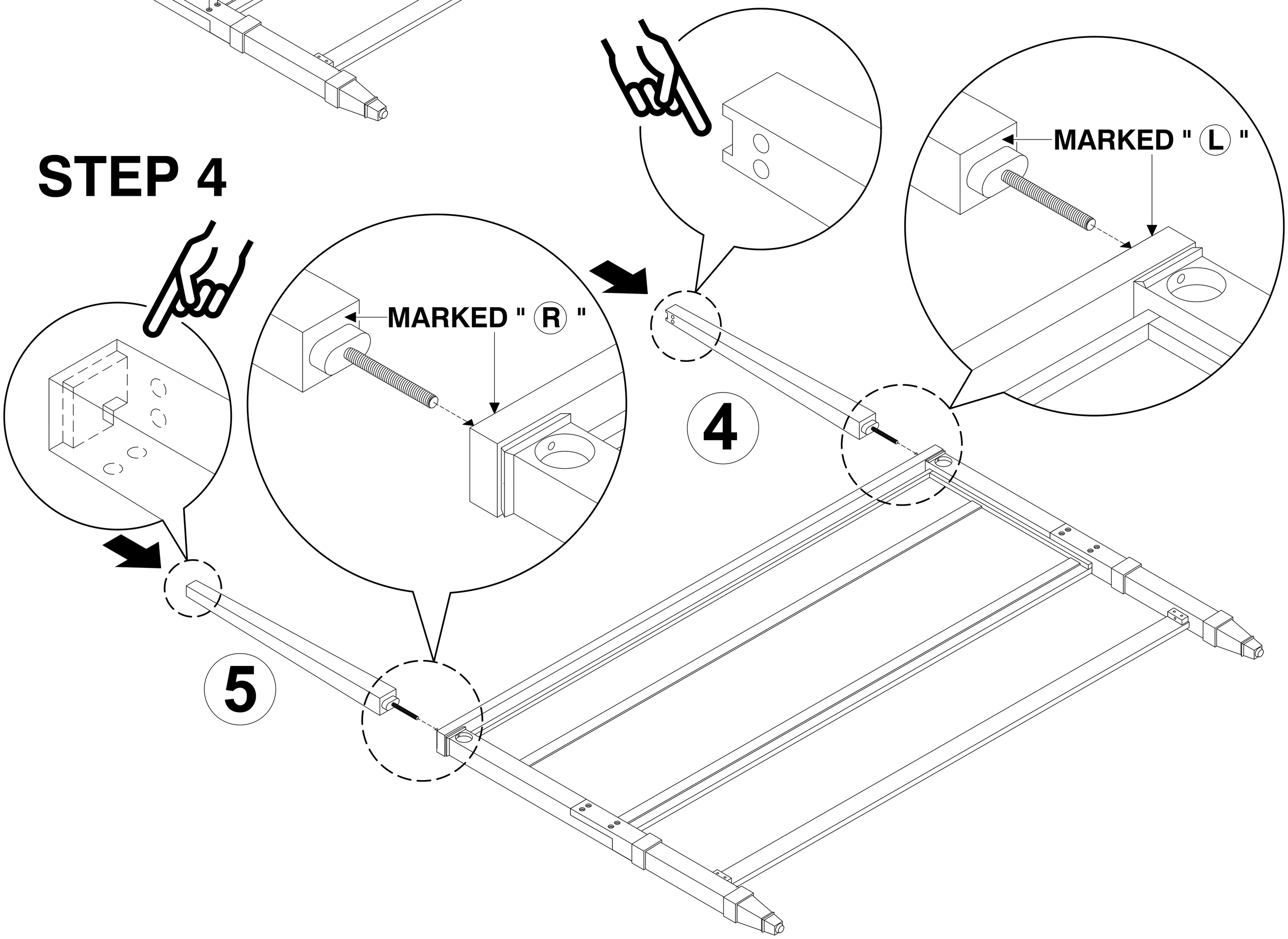

BACK OF HEADBOARD

STEP 5

E		2 PCS
F		2 PCS
J		1 PC

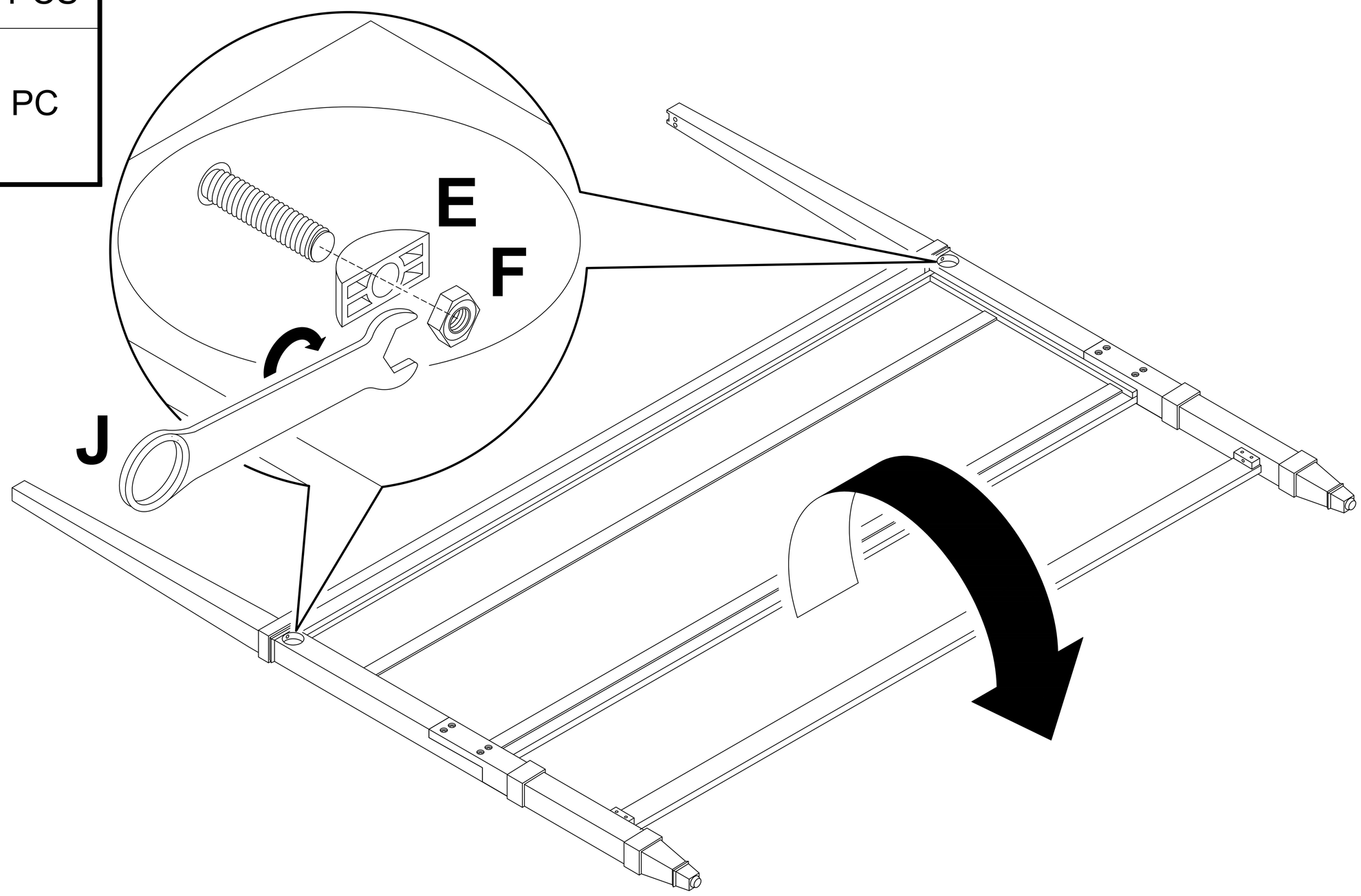

PLEASE FLIP TO FRONT FACE UP

STEP 6

D		4 PCS

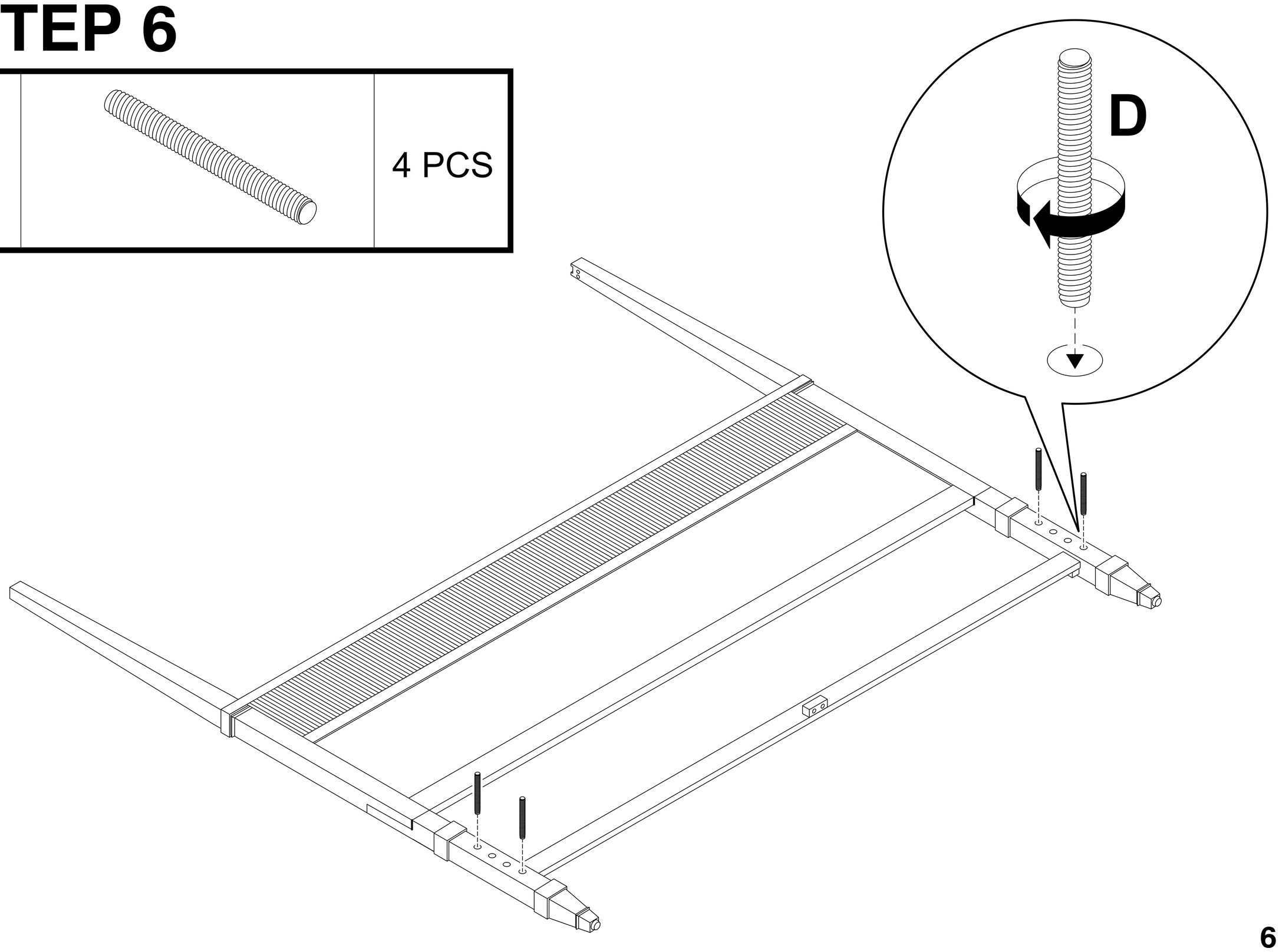

STEP 7

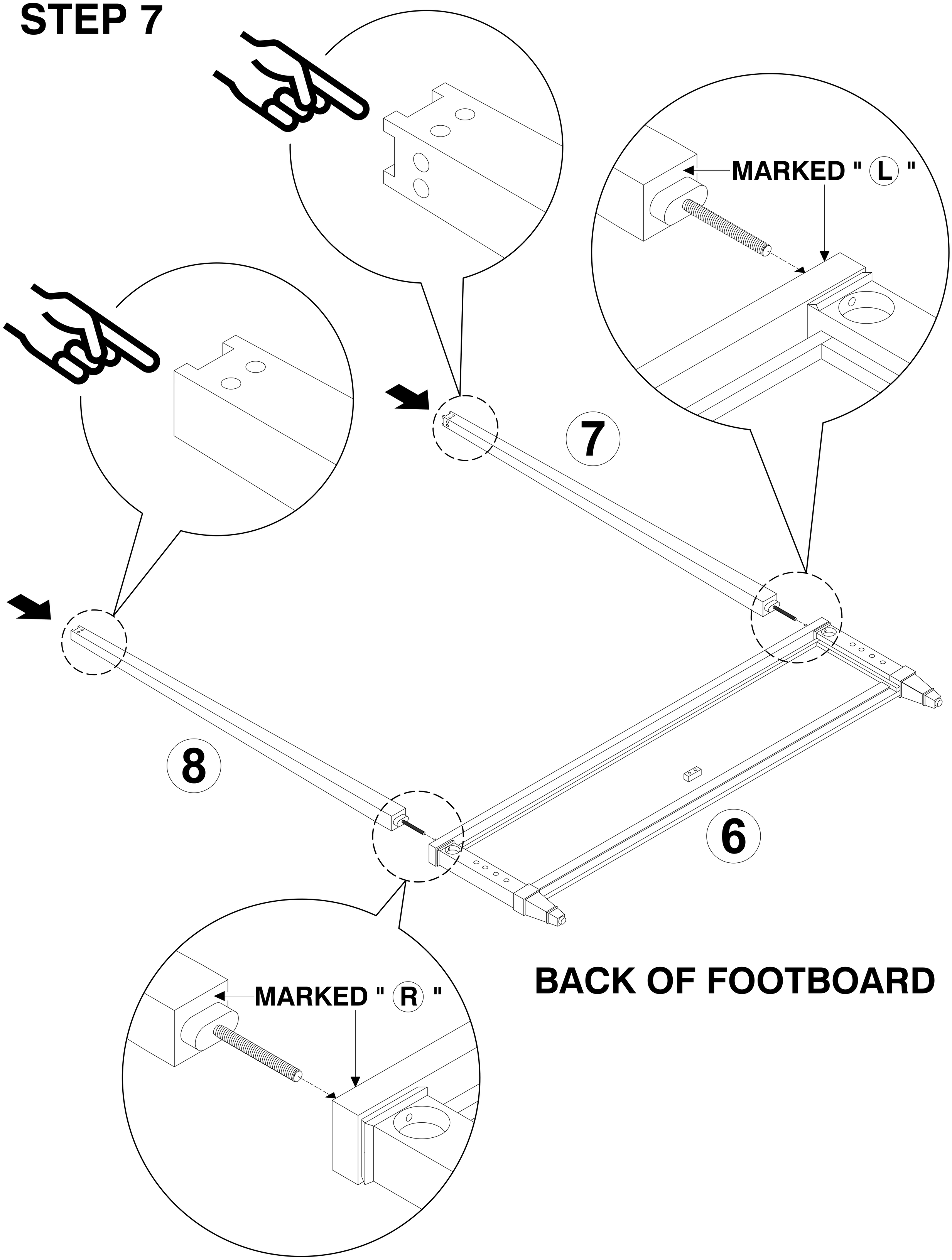

BACK OF FOOTBOARD

STEP 8

E		2 PCS
F		2 PCS
J		1 PC

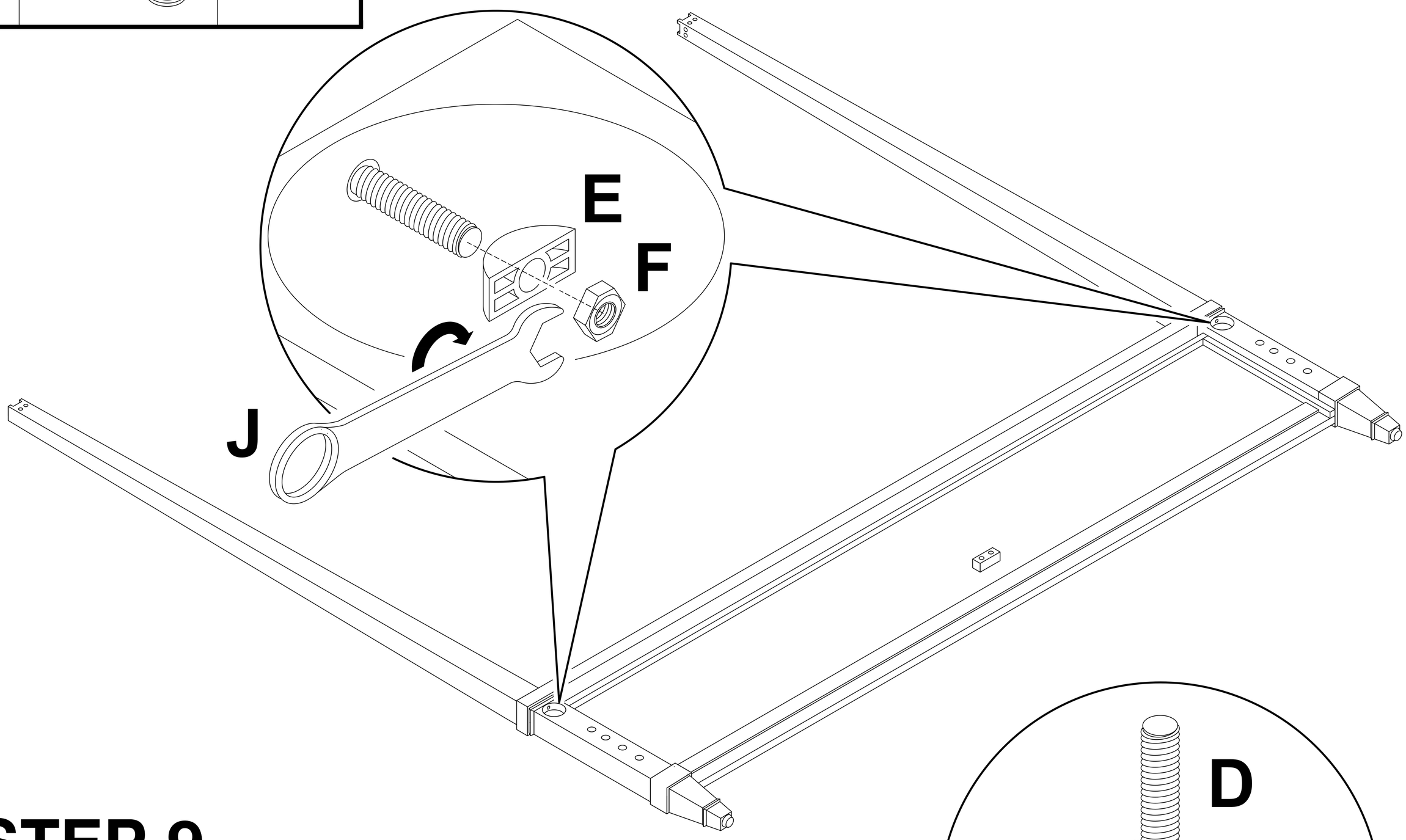

STEP 9

D		4 PCS

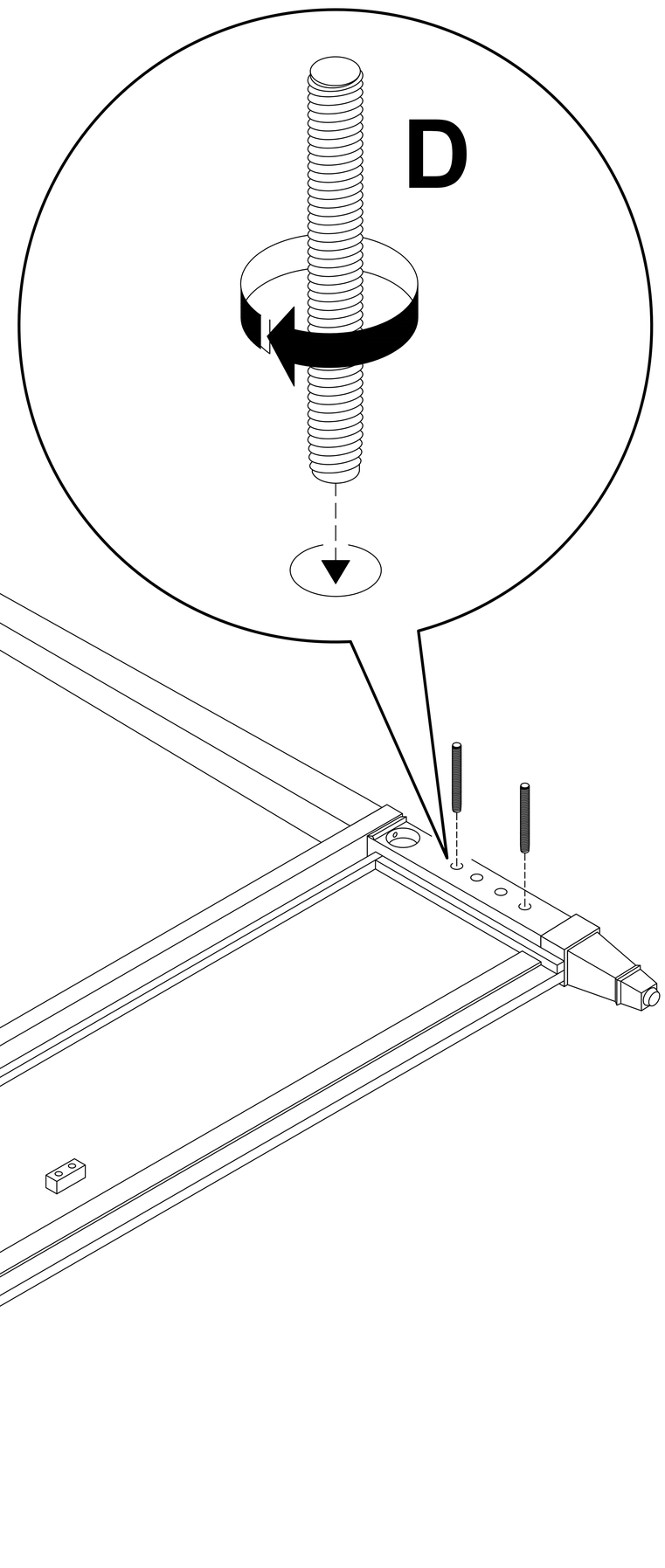

STEP 10

H	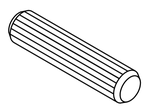	8 PCS

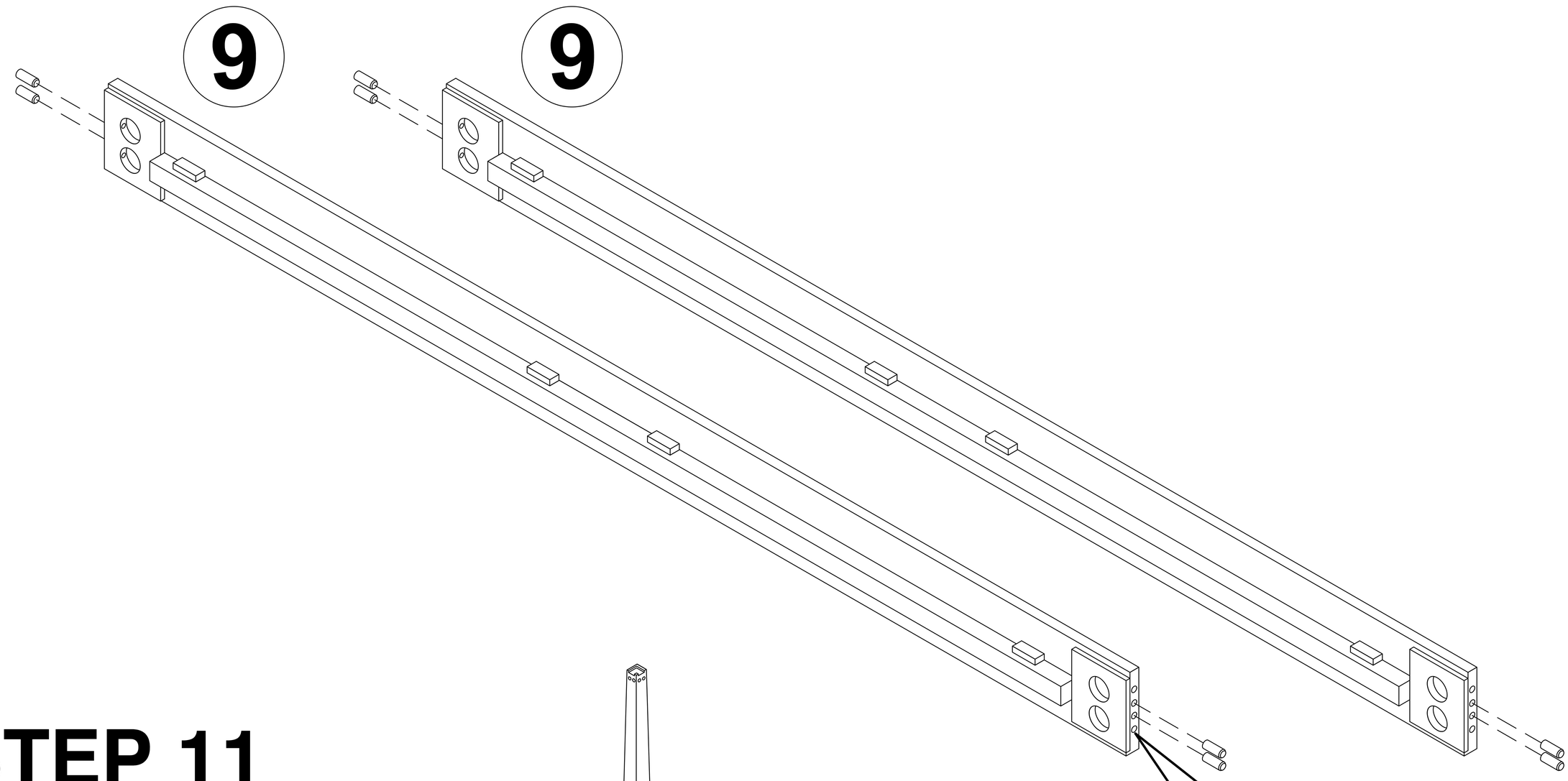

STEP 11

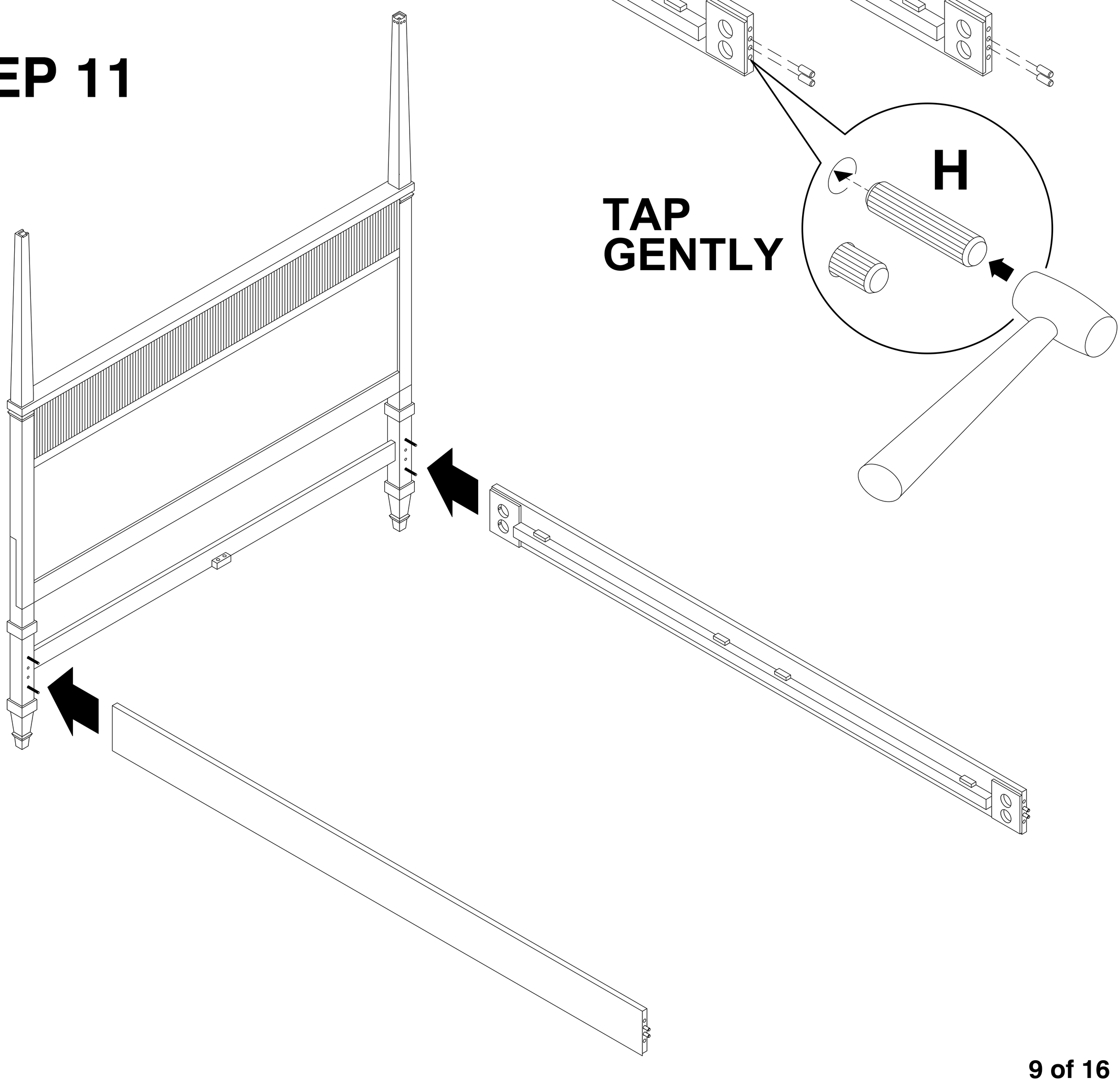

STEP 12

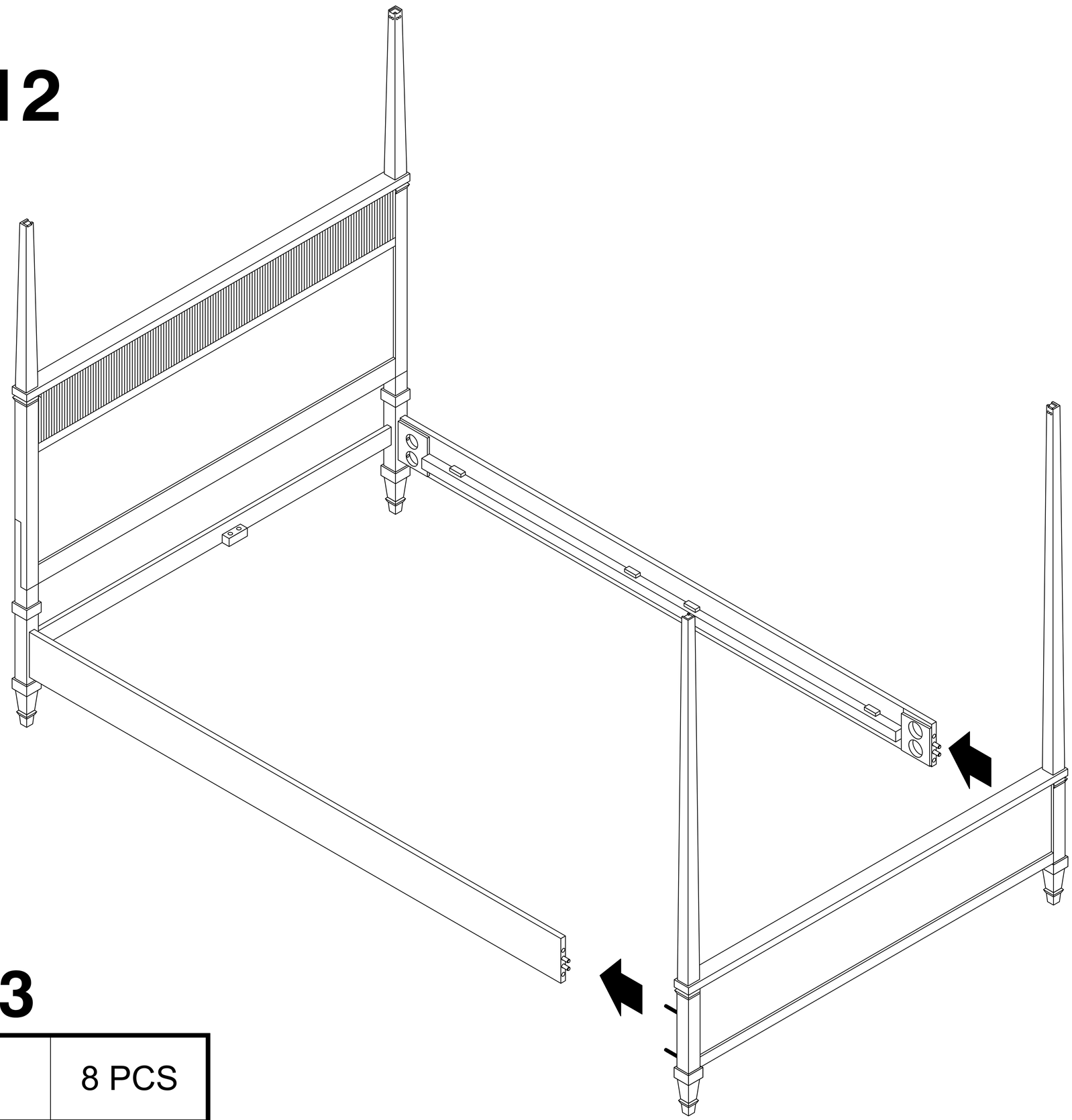

STEP 13

E	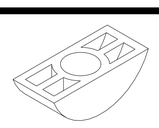	8 PCS
F	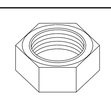	8 PCS
J	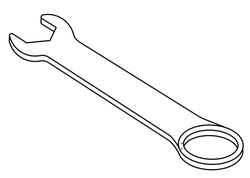	1 PC

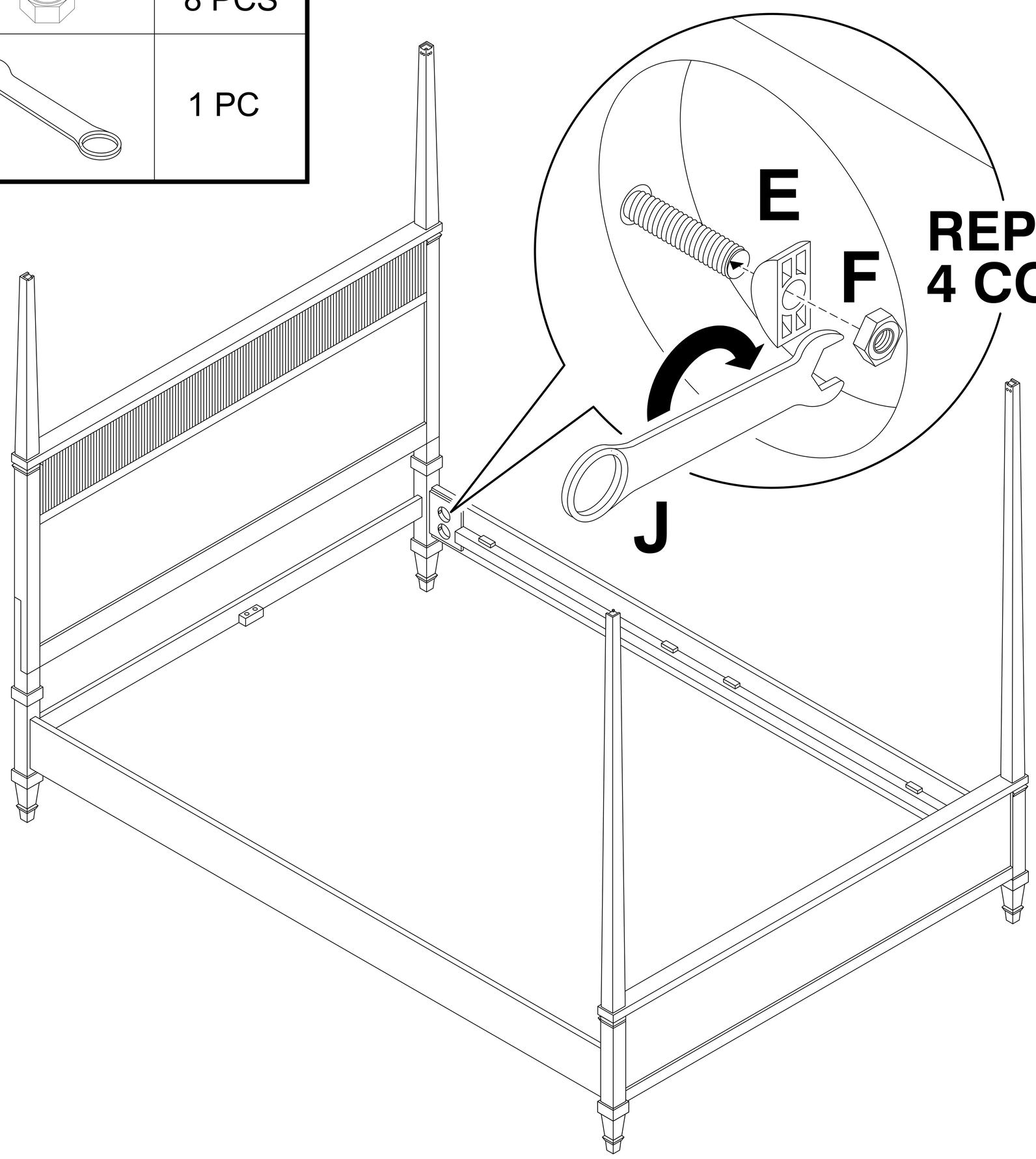

REPEAT FOR ALL 4 CORNERS

STEP 14

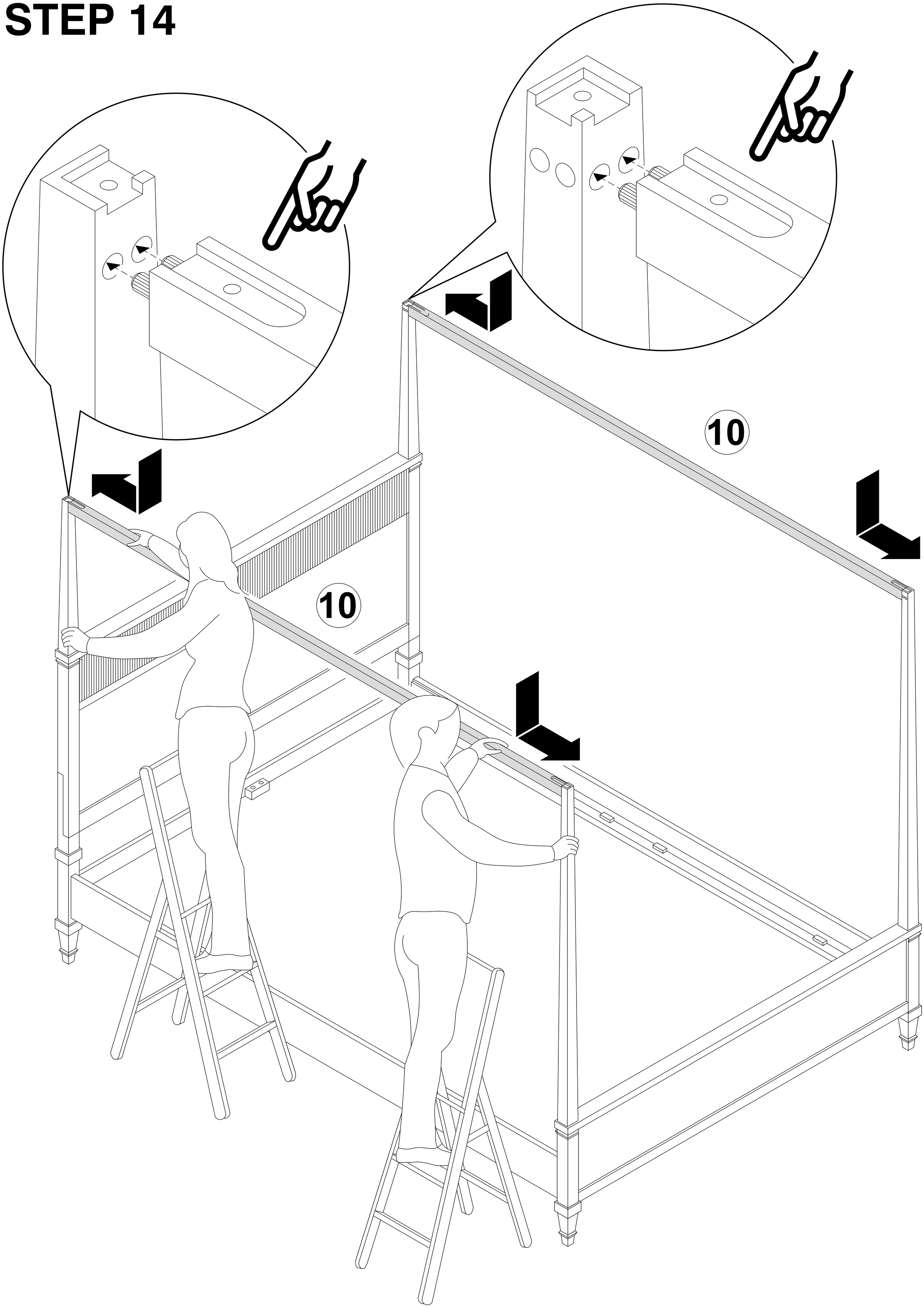

STEP 15

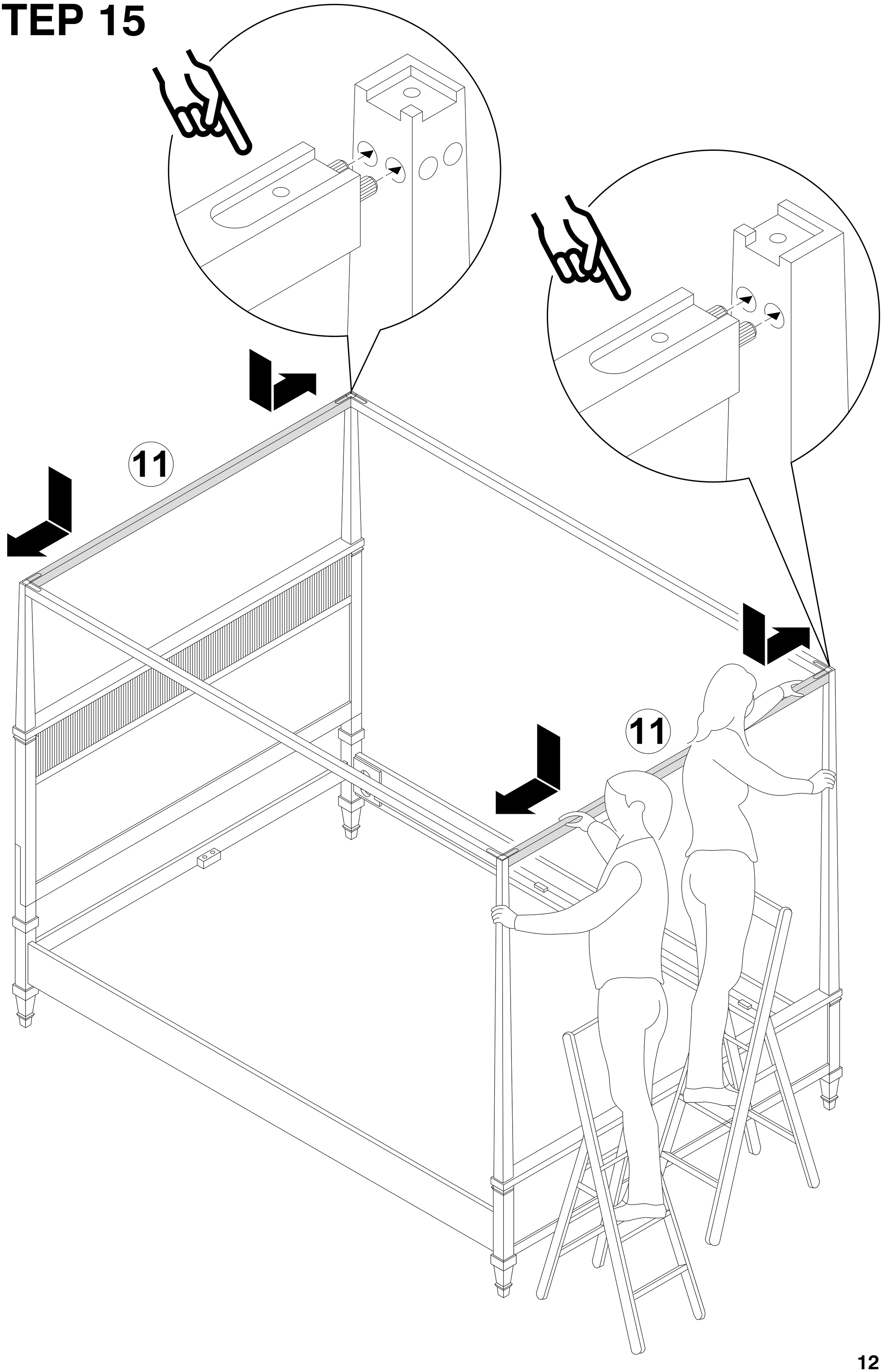

STEP 16

B		12 PCS
I		1 PC
K		4 PCS

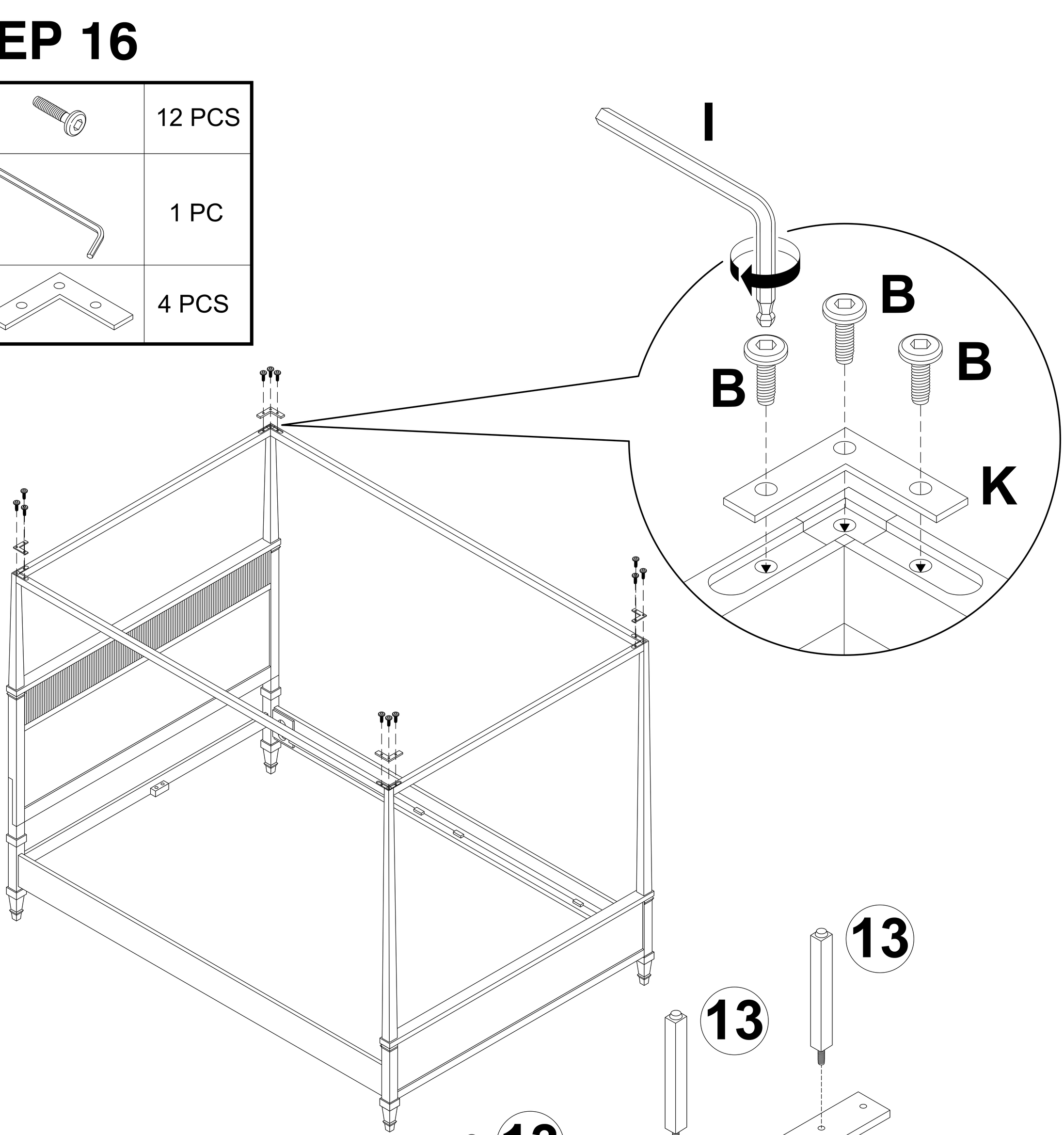

STEP 17

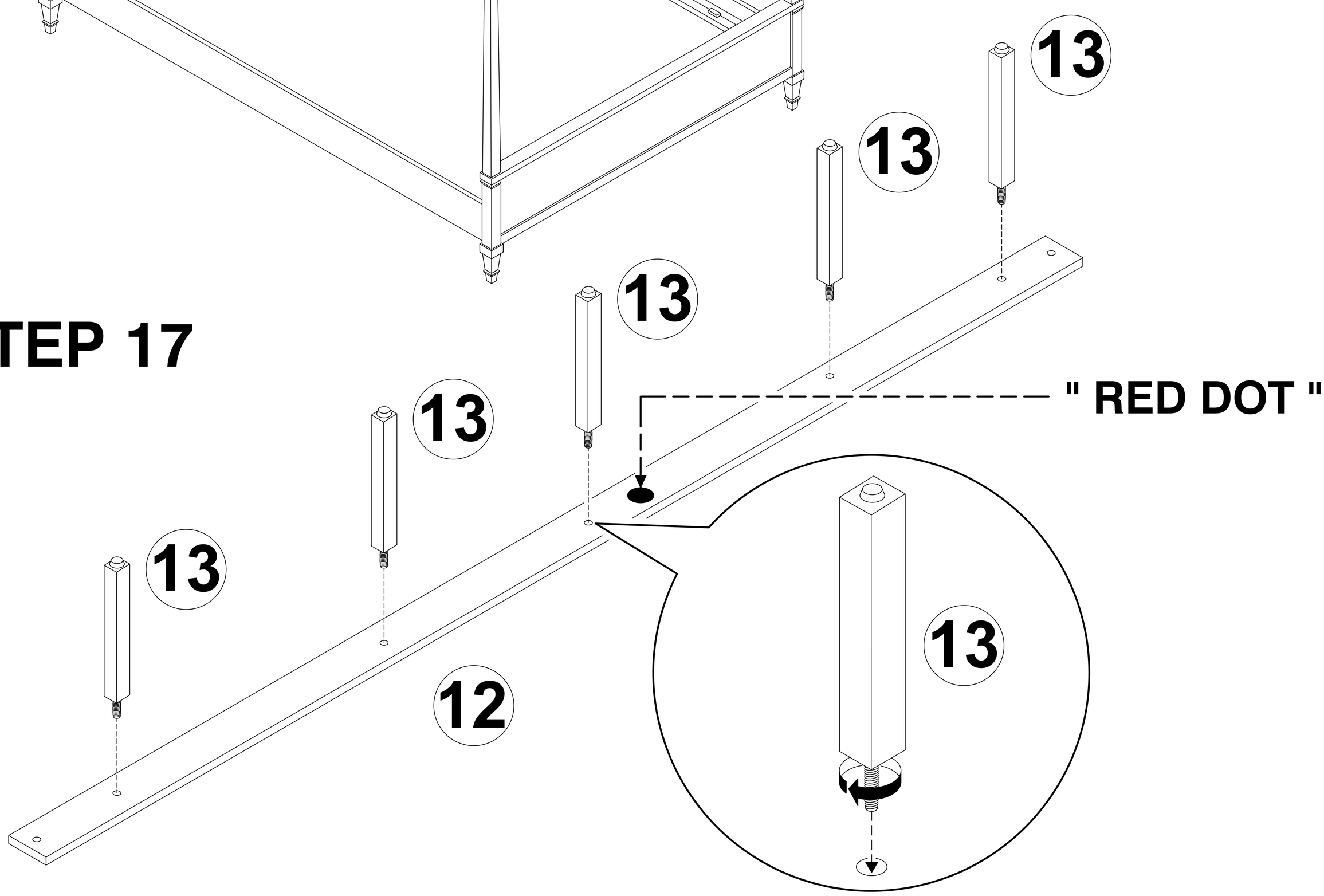

STEP 18

H		1 PC
I		1 PC
C		1 PC

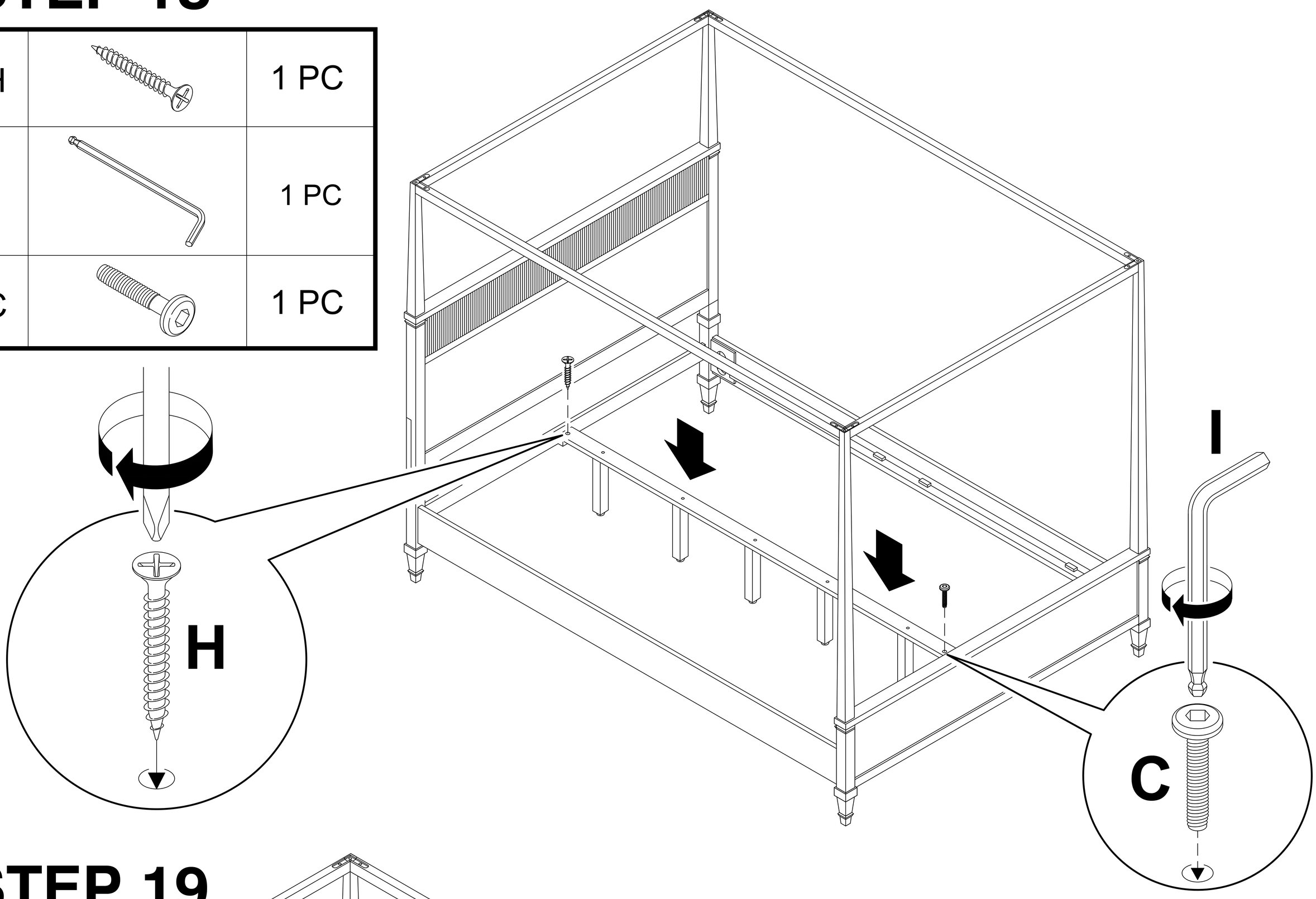

STEP 19

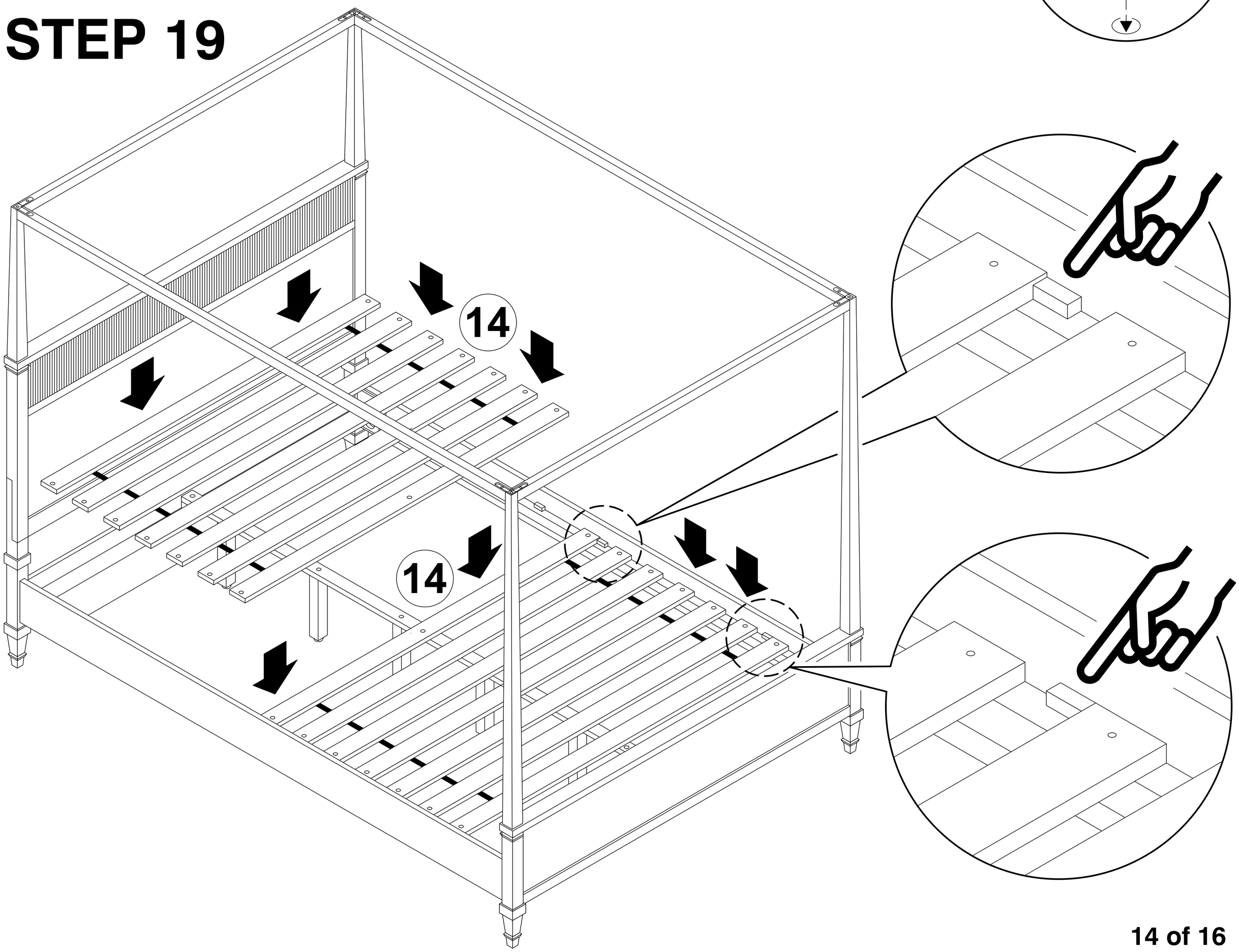

STEP 20

H	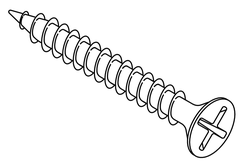	30 PCS

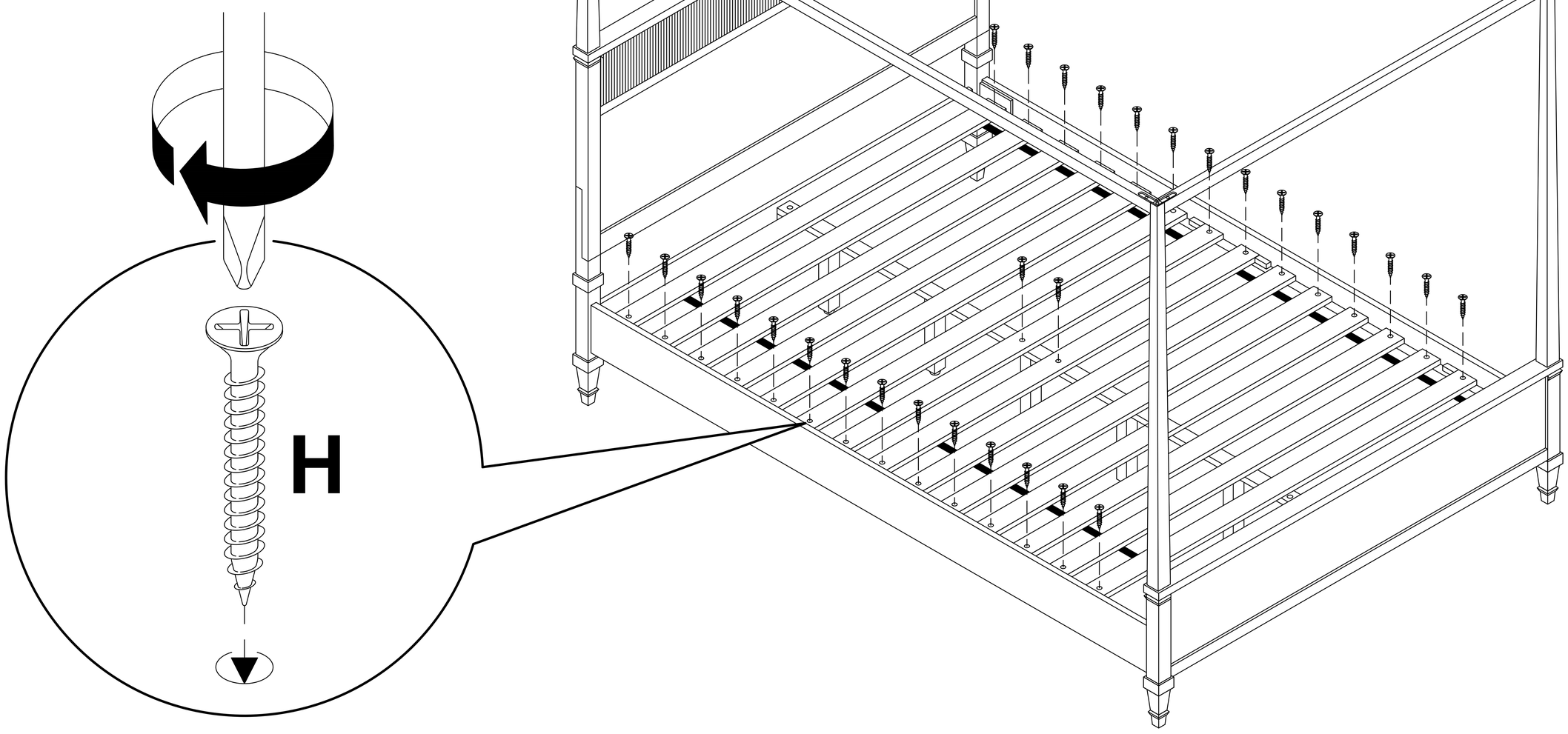

STEP 21

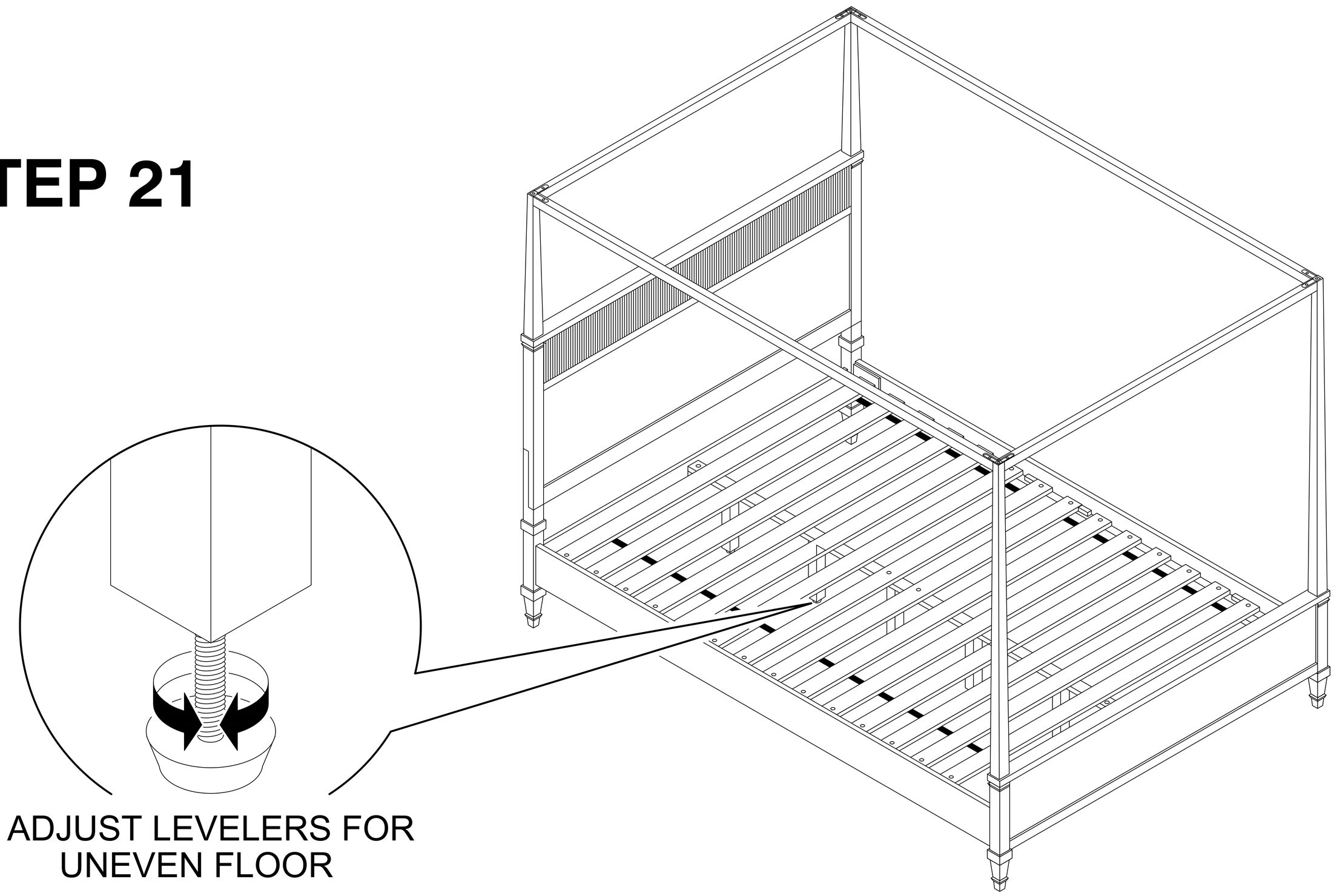

ADJUST LEVELERS FOR
UNEVEN FLOOR

Care & Maintenance

Do...

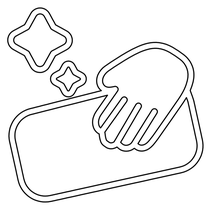

Wipe up spills immediately.

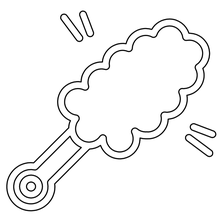

Dust and pick-up spills using a clean, non-colored, lint-free, dry cloth.

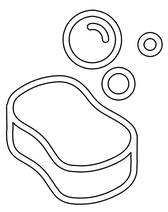

Use mild non-abrasive soap and water.

Don't...

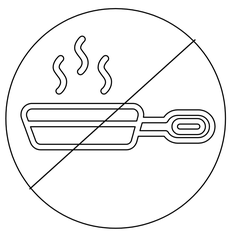

Do not put hot items directly on furniture surface.

Do not clean furniture with harsh cleansers or polish.

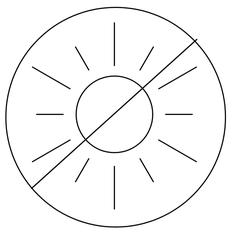

Do not place furniture in direct sunlight.

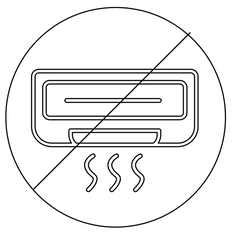

Do not place furniture near heating or cooling vents.

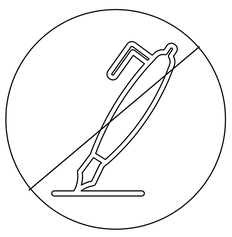

Do not write on furniture without a padded barrier to protect the surface.

Do not place furniture outside. For indoor use only.