MADISONPARK®

ASSEMBLY INSTRUCTIONS

Description: Madison End Table

Important safety instructions:

- Please read carefully all instructions before assembly.
- For your safety and ease, assembly by two or more adults is recommended.
- Keep instructions for future use.

Pre-assembly:

- Do not discard any content until assembly is complete to avoid accidentally discarding small parts or hardware.
- Take out all parts and hardware from box.

Parts List

Item	Description		QTY
P1	Table Top		1
P2	Legs		5
P3	Mounting Plate-1		2
P4	Mounting Plate-2		2

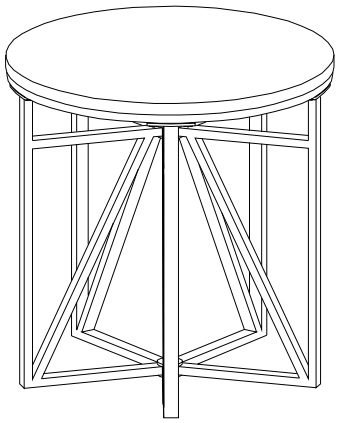

Hardware List

Item	Description		QTY
H1	Bolts Ø1/4"x 5/8"L		12
H2	Allen Wrench 1/4"		1

DISCLAIMER:

WHEN PROPERLY ASSEMBLED, THIS ITEM IS SAFE FOR INTENDED USE. SELLER IS NOT LIABLE FOR ANY DAMAGES RESULTING FROM ITEM BEING IMPROPERLY ASSEMBLED AFTER PURCHASE.

Assembly Procedures:

Step 1. Assemble the table on a flat, soft surface such as a carpet or cloth to prevent scratching the finish. **Loosely** attach each leg (2) to table top (1) as shown below.

(H1)x10 Bolts Ø1/4"x5/8"L

(H2)x1 Allen Wrench Ø1/4"

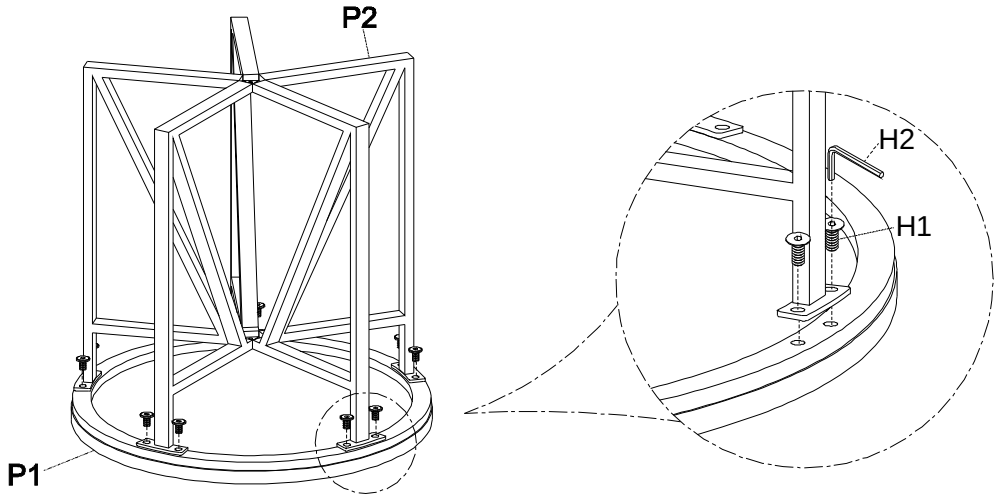

Step 2. Attach mounting plates (P3,P4) to the assembled legs (P2) as shown below.

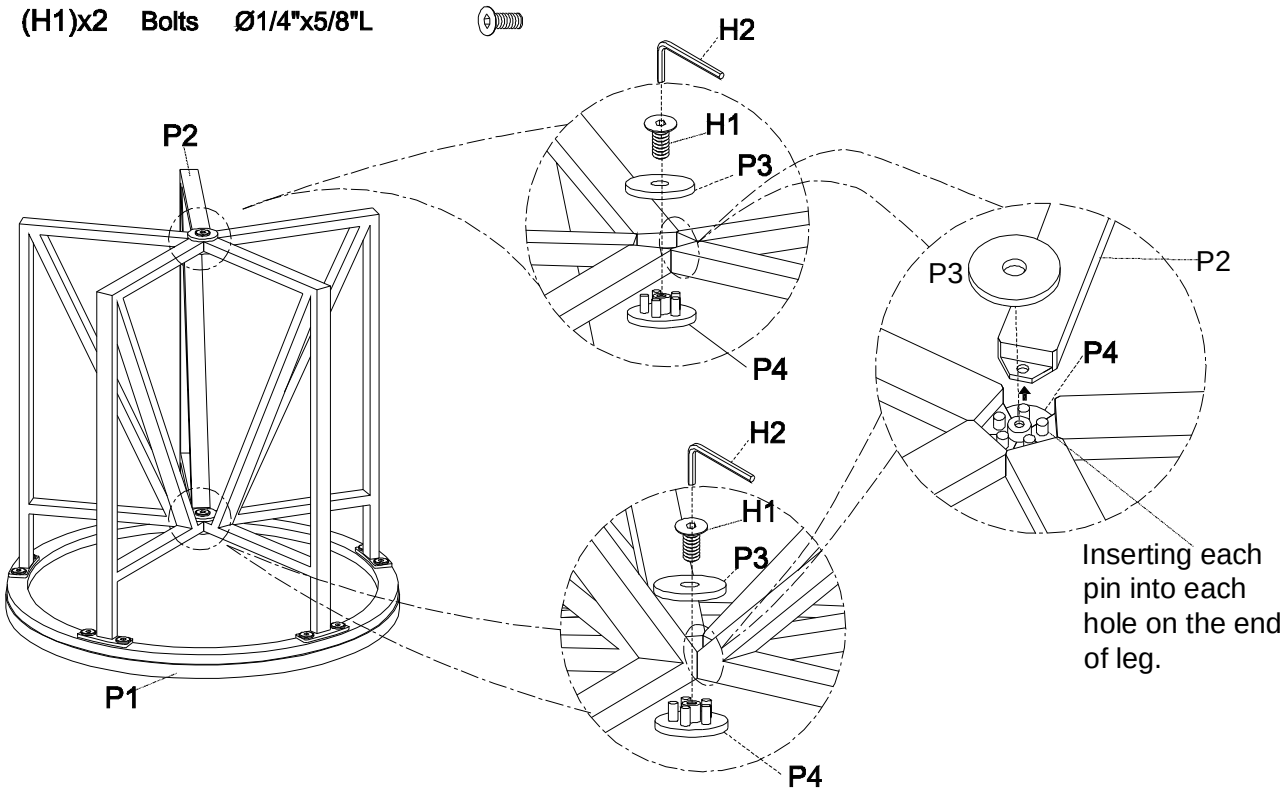

Step 3.

1) Securely tighten all bolts with Allen wrench (H2).
2) Turn the assembled table to an upright position .
3) Leveler adjustment: Leveler are pre-installed on the legs and adjust as needed to make sure the desk is level. Assembly is complete. Failure to follow these instructions may cause the bolts to misalign during assembly.

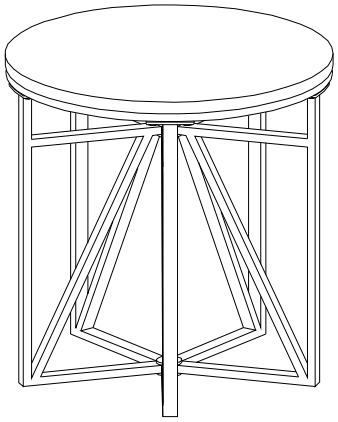

ADDITIONAL NOTE ABOUT SAFETY: BOLTS MAY LOOSEN DURING NORMAL EVERYDAY USE. THEY SHOULD BE PERIODICALLY INSPECTED AND RE-TIGHTENED TO PREVENT DAMAGE OR INJURY. ALWAYS CHECK TO ENSURE THAT ALL HARDWARE IS KEPT TIGHTENED.

Thank you for your purchase